Pb Process Capable

RoHS Compliant 2011/65/EU

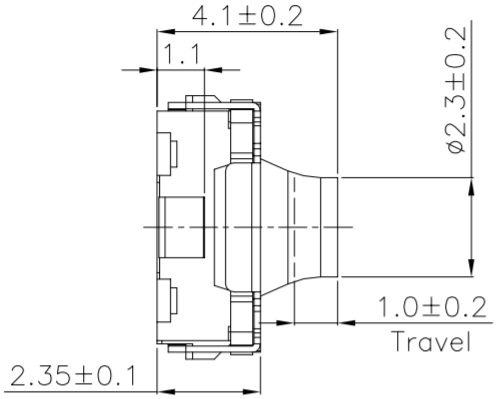

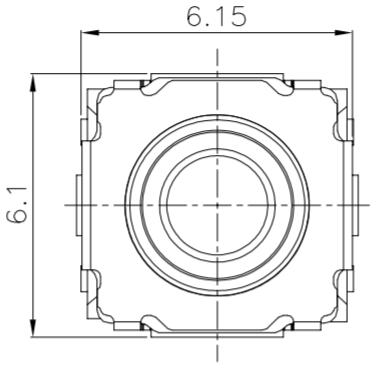

Circuit Diagram

Typical Specifications :
1. Rating : DC 12V 50mA
2. Insulation resistance: ≥100MΩ
3. Withstand voltage: AC 250V/1min
4. Forcel: 350±80gf
5. Life:300,000 Cycles Min.
6.Ingress protection: IP67

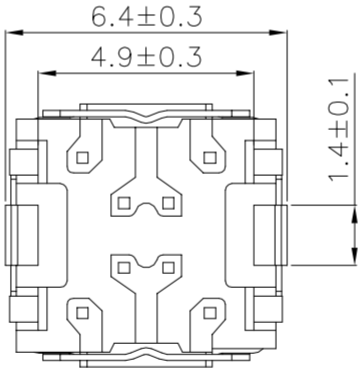

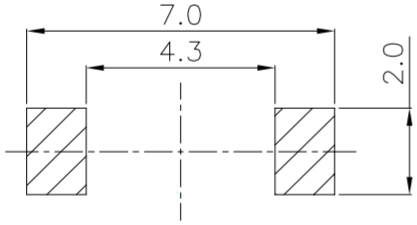

PCB Layout(Pattern side)

ITEM	PART NAME	TER'NO.	QTY.	MATERIAL	FINISHING	REMARK
6	Internal buttons	——	1	PPA	Black	——
5	Terminal	——	4	Brass(0.3t)	Plating silver	——
4	Contact	——	2	F.Ag/SUS	——	——
3	Base	——	1	LCP	Black	——
2	Cover	——	1	SUS	——	——
1	Keystoke	——	1	silica gel	——	——

REV	REVISION RECORD	DATE
A0	NEW	

	TOLERANCES	
SCALE: 1:1	LINEAR	ANGLES
UNITS: mm	.X ±0.20	X. ±2°
SIZE: A4	.XX ±0.10	
SHEET: 1/1	.XXX ±0.03	

DR	KEN
CHKD	FROS
APPD	ANGEL
WEB	WWW.HUATN.COM

PART NO.: TS-6615UP

TITLE: TACT SWITCH

HUATN

THESE DRAWINGS AND SPECIFICATIONS ARE THE PROPERTY OF HUATN ELECTRONICS CO.,LTD. AND SHALL NOT BE REPRODUCED, COPIED OR USED IN ANY MANNER WITHOUT THE PRIOR WRITTEN CONSENT OF HUATN ELECTRONICS CO.,LTD.